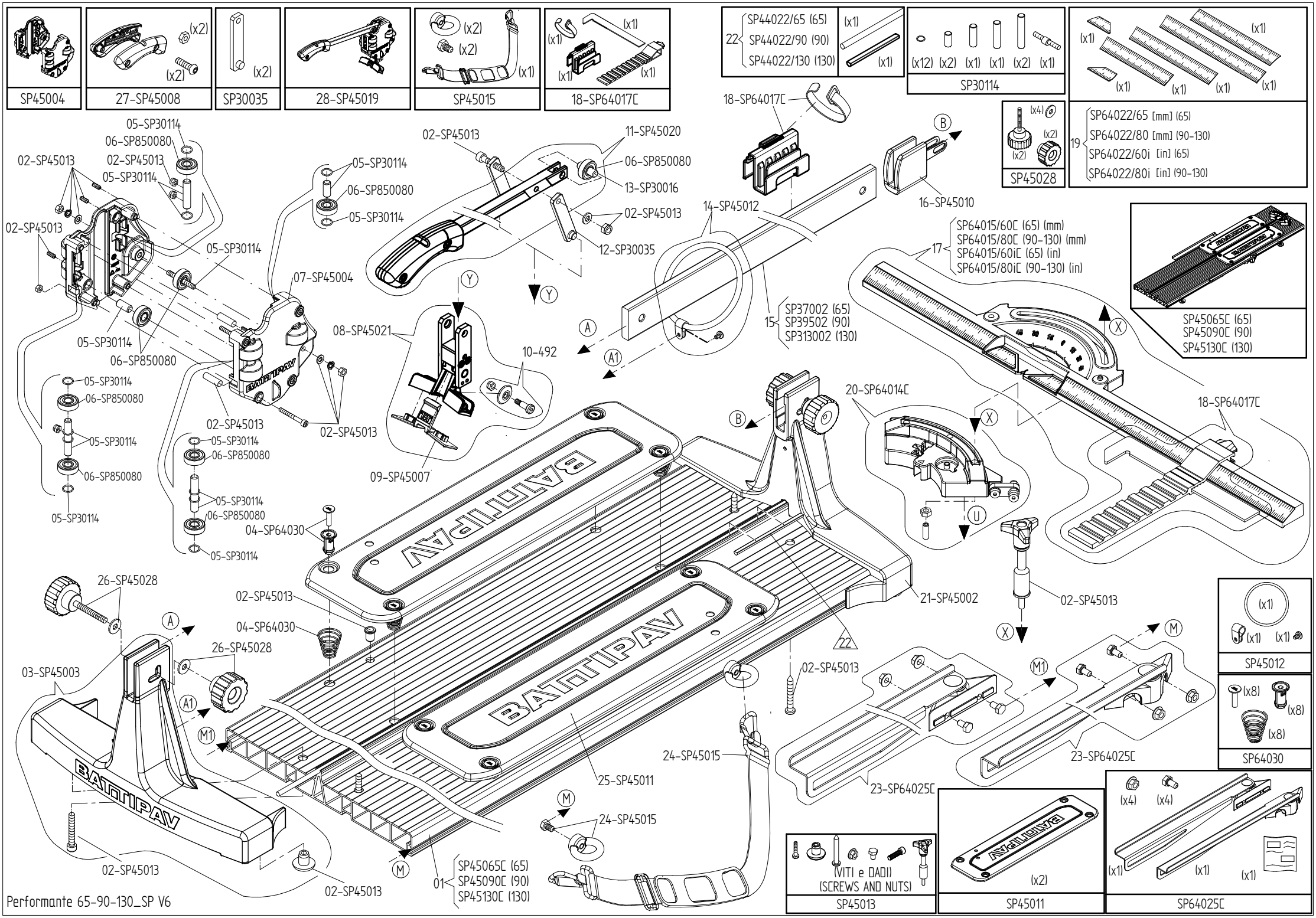
SP45004
27-SP45008
SP30035
28-SP45019
SP45015
18-SP64017C
22 SP44022/65 (65)
SP44022/90 (90)
SP44022/130 (130)
SP30114
SP45028
19 SP64022/65 [mm] (65)
SP64022/80 [mm] (90-130)
SP64022/60i [in] (65)
SP64022/80i [in] (90-130)
17 SP64015/60C (65) (mm)
SP64015/80C (90-130) (mm)
SP64015/60iC (65) (in)
SP64015/80iC (90-130) (in)
SP45065C (65)
SP45090C (90)
SP45130C (130)
15 SP37002 (65)
SP39502 (90)
SP313002 (130)
01 SP45065C (65)
SP45090C (90)
SP45130C (130)
SP45012
SP64030
SP45013
(VITI e DADI)
(SCREWS AND NUTS)
SP45011
SP64025C
Performante 65-90-130_SP V6