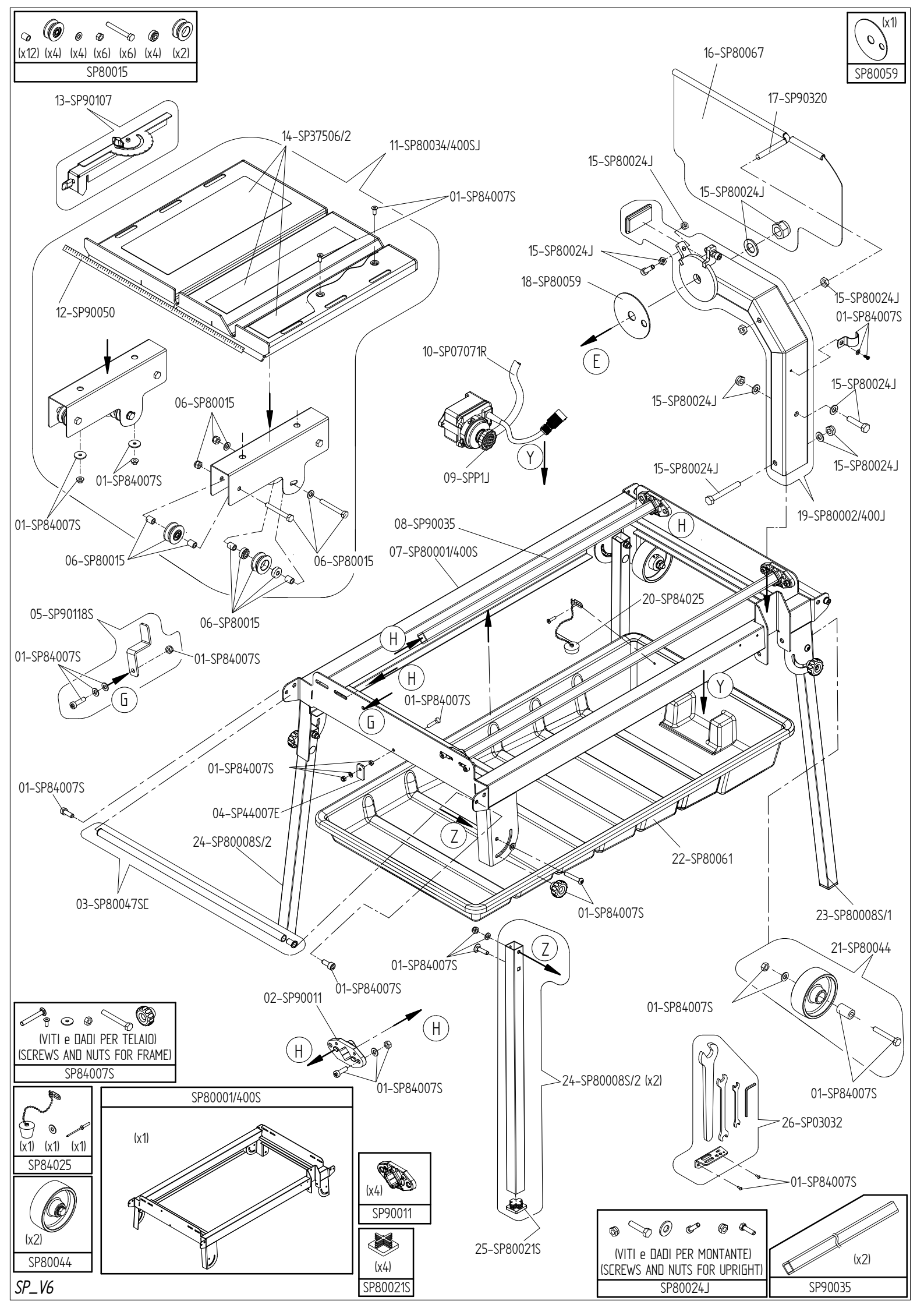
(x12) (x4) (x4) (x6) (x6) (x4) (x2)
SP80015
(x1)
SP80059
16-SP80067
17-SP90320
13-SP90107
14-SP37506/2
11-SP80034/400SJ
01-SP84007S
15-SP80024J
15-SP80024J
15-SP80024J
18-SP80059
15-SP80024J
01-SP84007S
12-SP90050
E
10-SP07071R
15-SP80024J
15-SP80024J
06-SP80015
Y
09-SPP1J
15-SP80024J
15-SP80024J
01-SP84007S
15-SP80024J
19-SP80002/400J
01-SP84007S
08-SP90035
H
06-SP80015
07-SP80001/400S
06-SP80015
06-SP80015
20-SP84025
05-SP90118S
H
01-SP84007S
01-SP84007S
H
Y
G
01-SP84007S
G
01-SP84007S
01-SP84007S
04-SP44007E
Z
24-SP80008S/2
22-SP80061
03-SP80047SC
01-SP84007S
23-SP80008S/1
Z
21-SP80044
01-SP84007S
01-SP84007S
02-SP90011
H
01-SP84007S
H
(VITI e DADI PER TELAIO)
(SCREWS AND NUTS FOR FRAME)
SP84007S
24-SP80008S/2 (x2)
01-SP84007S
(x1) (x1) (x1)
SP84025
SP80001/400S
(x1)
26-SP03032
(x2)
SP80044
(x4)
SP90011
01-SP84007S
(x4)
SP80021S
25-SP80021S
(VITI e DADI PER MONTANTE)
(SCREWS AND NUTS FOR UPRIGHT)
SP80024J
(x2)
SP90035
SP_V6

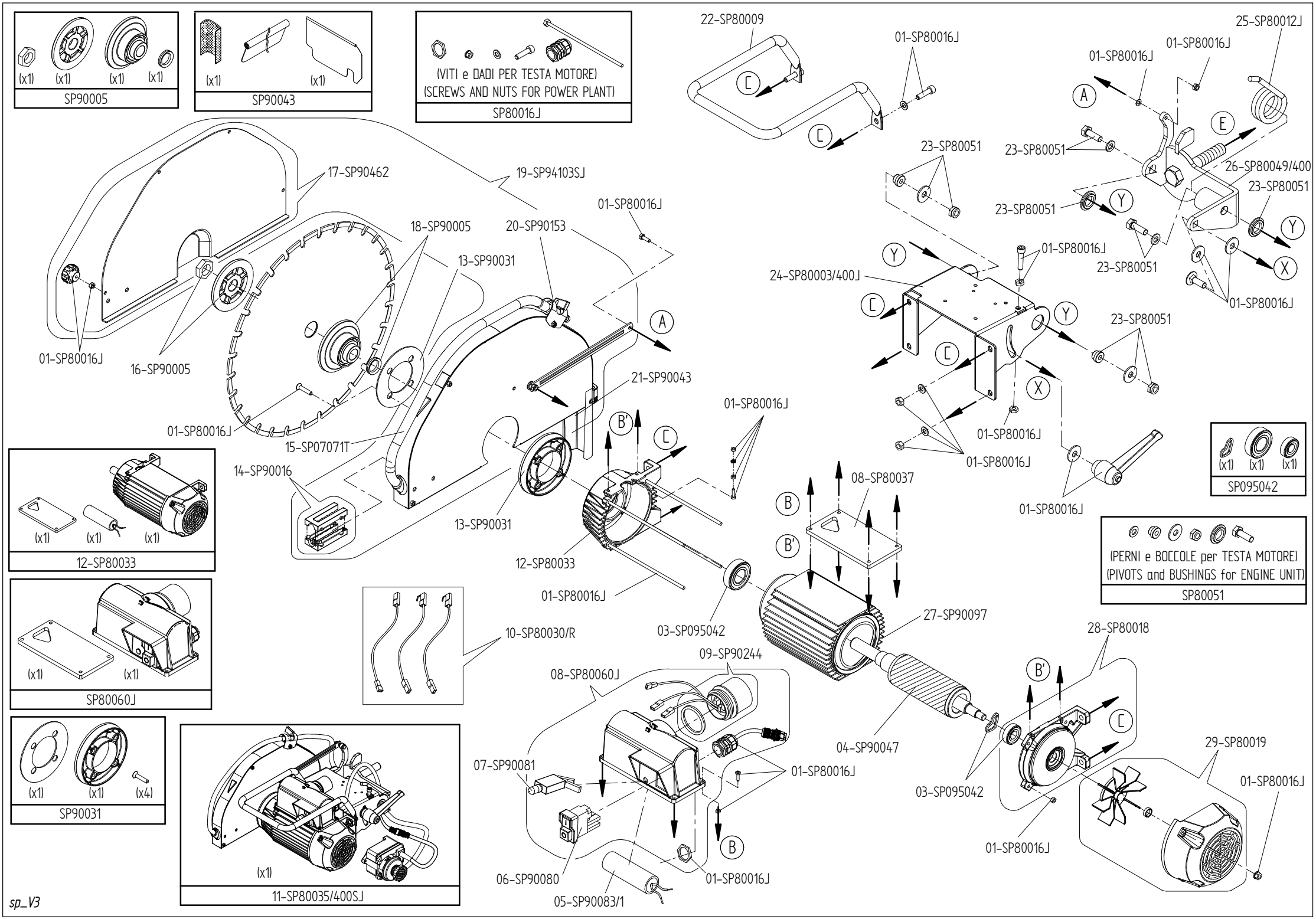
(x1) (x1) (x1) (x1)
SP90005
(x1) (x1)
SP90043
(VITI e DADI PER TESTA MOTORE)
(SCREWS AND NUTS FOR POWER PLANT)
SP80016J
22-SP80009
01-SP80016J
25-SP80012J
23-SP80051
26-SP80049/400
17-SP90462
19-SP94103SJ
18-SP90005
20-SP90153
13-SP90031
16-SP90005
24-SP80003/400J
21-SP90043
15-SP07071T
14-SP90016
12-SP80033
(x1) (x1) (x1)
SP095042
08-SP80037
(PERNI e BOCCOLE per TESTA MOTORE)
(PIVOTS and BUSHINGS for ENGINE UNIT)
SP80051
10-SP80030/R
03-SP095042
27-SP90097
28-SP80018
09-SP90244
08-SP80060J
(x1) (x1)
SP80060J
04-SP90047
29-SP80019
07-SP90081
06-SP90080
05-SP90083/1
(x1) (x1) (x4)
SP90031
(x1)
11-SP80035/400SJ
sp_V3